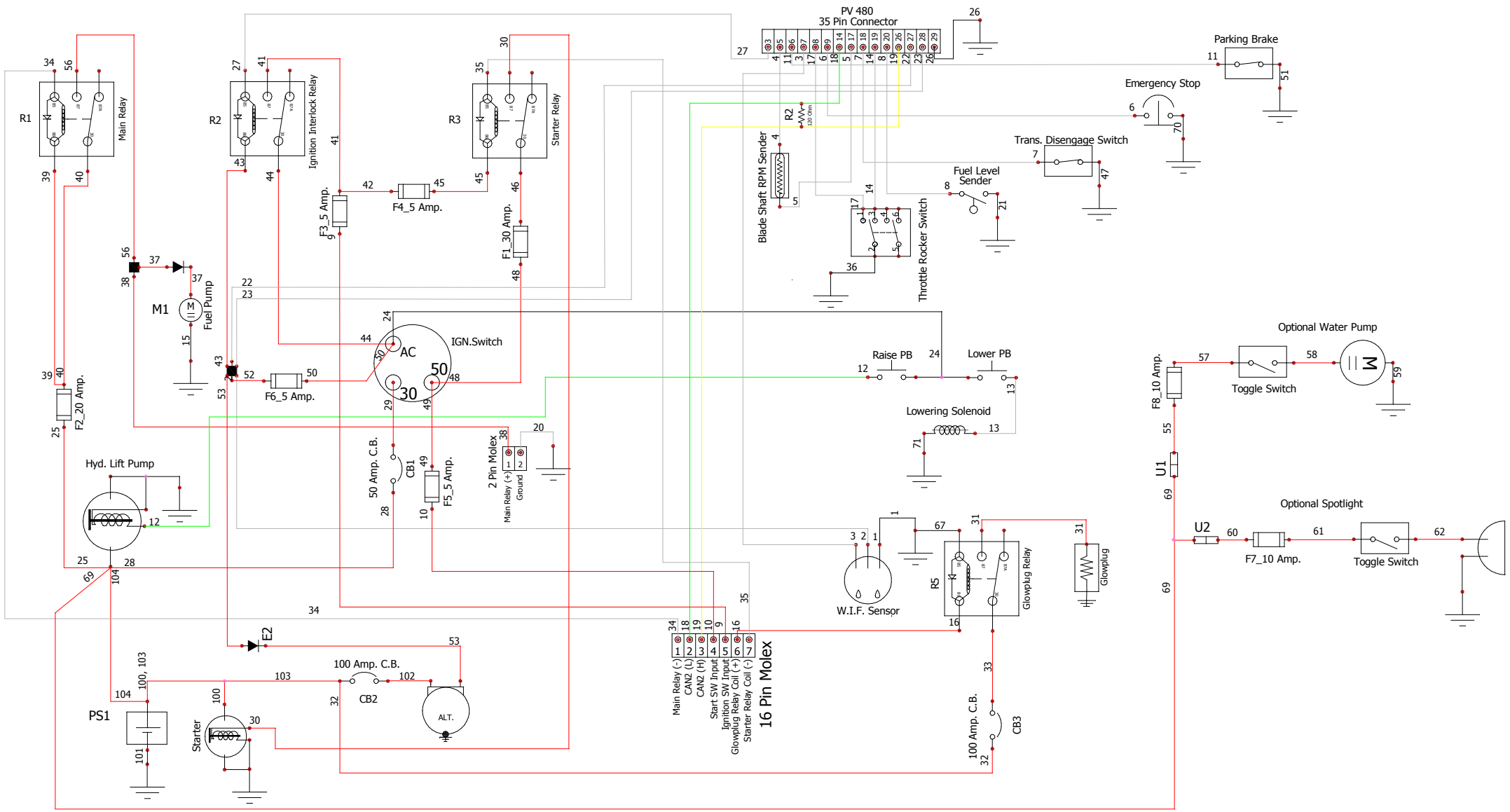

SOLIDWORKS Electrical

Power

REV.	DATE	NAME	CHANGES
0	10/28/2015	jturinsky	CC_6571

User data 2

REVISION 0

SCHEME 04

CONTRACT:

LOCATION: L1

Main electrical closet

Document realized with version : 2015.0.2.17